☐ Fig. 200, ☐ Fig. C-200 (Corrosion Resistant) ☐ Fig. 201, ☐ Fig. C-201 (Corrosion Resistant)

Hydraulic Snubber with Extension Piece

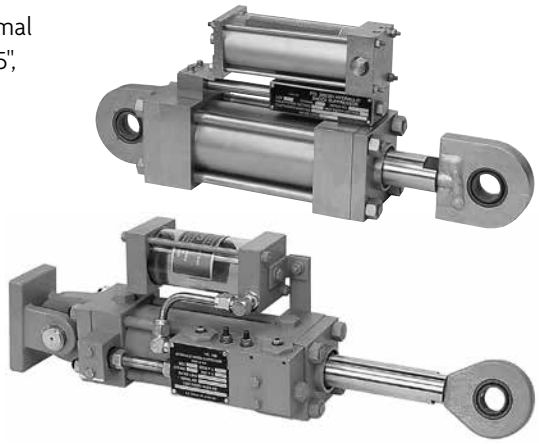

Size Range: Seven standard sizes with cylinder bores of 1 1/2" to 8" and with normal load ratings from 3,000 pounds to 128,000 pounds. All are available with 5", 10", 15", or 20" strokes except the 1 1/2" size which is offered with 5" and 10" strokes only. Snubbers are available with integral or remote reservoirs.

Finish: Fig. 200/201 painted with semi gloss primer. Fig. C-200/C-201 corrosion resistant; painted with carbo zinc.

Service: For use on piping systems or equipment when unrestrained thermal movement must be allowed, but which must be restrained during impulsive or cyclic disturbance. The unit is not effective against low amplitude, high frequency movement. Use with standard settings to prevent destructive response to earthquakes, flow transients or wind load. Special settings are available to absorb the continuous thrust resulting from safety valve blow-off or pipe rupture.

Standard settings: The standard settings are:
Locking (activation) velocity 8 +/- 2 in/min.
Bleed rate (post activation) at normal rated load 4 +/- 1 in/min. (Special settings are available).
The valves are calibrated at the factory within the tolerances indicated at room temperature. Locking velocity and bleed rate will vary with temperature. Testing has indicated that there is little effect of these changes on dynamic operation.

Features:

- Choice of valve type
  - ❒ Adjustable – permits field adjustments
  - ❒ Temperature compensating – minimizes the effects of temperature on lockup and bleed
- Choice of reservoir type
  - ❒ Transparent – continuous operation at 200° F with brief transients to 250° F
  - ❒ Metal or pressurized metal – allows brief transients to 340° F
  - ❒ Pressurized – eliminates the concern of reservoir orientation relative to valve and cylinder – minimizes internal contamination
  - ❒ Remote
- Factory calibrated valves
- Rapid, positive valve closure
- Special design minimizes the "lost motion" which results from the shifting and seating of piston seals
- Unlocked resisting force is less than 1% of rated load
- Stable, non-flammable, long life hydraulic fluid made highly visible for ease of inspection
- Self-aligning bushings permit ± 5° misalignment or angular motion. Bushings are coated with a dry lubricant.
- Choice of coating (paint, primer, carbo zinc, epoxy, plating or other)

LOADS (LBS)	
Cylinder Size (in)	Max Load *
1½ (5" stroke)	3,000
1½ (10" stroke)	1,250
2½ (5", 10", 15" stroke)	12,500
2½ (20" stroke)	10,500
3¼	21,000
4	32,000
5	50,000
6	72,000
8	128,000

* Loads must not be applied outside a 10° included angle cone of action to the pipe clamp axis without special authorization.

PROJECT INFORMATION	APPROVAL STAMP
Project:	☐ **Approved**
Address:	☐ **Approved as noted**
Contractor:	☐ **Not approved**
Engineer:	**Remarks:**
Submittal Date:	
Notes 1:	
Notes 2:	

Fig. 200, Fig. 201 Hydraulic Snubber (cont.)

Upgrade Kits: Kits are available to upgrade existing snubbers with temperature compensating valves and/or pressurized reservoir.

How to size:

(1) **Cylinder size:** Use table on submittal page 1 to select cylinder bore size large enough to restrain expected load.

(2) **Stroke:** Define expected movement of the pivot joining the suppressor with the equipment to be protected (cold to hot plus any abnormal movements). Determine maximum and minimum distances between this curve and the fixed pivot pin of the snubber. The minimum recommended stroke is 20% greater than the difference between these lengths.
Note: If erected position at the snubber's location on the equipment is outside of the range of normal cold-to-hot movement (e.g. cold pull of pipe), the snubber should not be installed until after the equipment is in its cold position. This eliminates the need of providing for the extra travel in the snubber's stroke. For 2 1/2" through 8" snubbers, standard strokes are 5", 10", 15", and 20". For the 1 1/2" snubber, 5" and 10" are the only standard strokes.

(3) **Installed piston setting:** As indicated previously, the snubber should be installed at its cold piston position if possible. From the installed position, take extension (outward movement) of the piston rod as positive (+) and retraction as negative (-).

(4) **Installed piston position** =

$$\left(\frac{\text{Stroke} - (\text{Algebraic Sum of Movements})}{2} \right)$$

To aid in measuring the piston position, we have shown a dimension, "Z". This dimension represents the distance between the cylinder head and the end of the rod when the rod is fully retracted. Whenever specifying the position at which the piston rod is to be set, the total dimension from the cylinder head to the end of the rod should be given. Thus, Piston Setting = Piston Position + Z.

(5) **Assembly length:** Determine the installed "C" dimension by adding the installed piston position (not setting) to C minimum. Lay in take out dimensions E and/or B, and find required pin-to-pin snubber length. If a pin-to-pin length adjustment is desired, use Fig. 201. Calculate the required "W" dimension by subtracting (C installed + F) from the required pin-to-pin length. If this is less than W minimum, only a Fig. 200 can be used, and one of the attachments will have to be moved or shimmed to suit. If a Fig. 200 is to be used, make sure that the required pin-to-pin length is at least as great as (C installed + B). If neither a Fig. 200 nor a Fig. 201 can be accommodated, and the installation cannot be modified, consult your Anvil representative about designing a special or modified unit.

Ordering:

Ordering: Specify part number as follows:

XXX	X	XX	X	X	X	X	
						L	Reservoir Orientation O=Does not apply for pressurized or remote U=Rod up D=Rod down or horizontal
							Reservoir Type L=Transparent (Polycarbonate) M=Metal (limited applications) P=Pressurized R=Remote
							Valve Type A=Adjustable T=Temperature Compensating
							Option (0,1,2, or 3), See Option Table Below
							Stroke (5, 10, 15, 20)
							Cylinder Size: 1 (1½ Cyl.) 2 (2½ Cyl.) 3 (3¼ Cyl.) 4 (4Cyl.) 5 (5Cyl.) 6 (6Cyl.) 8 (8 Cyl.)
							Figure No. (200 or 201), Also Specify: W Dimension when Specifying Fig 201 Pipe Clamp Size when Specifying Option 3 Surface Coating Cold and Hot Piston Settings.

FIG. 200 & FIG. 201 OPTIONS

Option	Consists of…
0	Fig 200: Basic unit (snubber) with pivot mount and one rear bracket.
	Fig. 201: Basic unit with extension piece and one rear bracket.
1	Option 0 plus cylinder eye.
2	Option 0 plus cylinder eye and additional rear bracket.
3	Option 0 plus cylinder eye and pipe clamp.

Fig. 200, Fig. 201

Hydraulic Snubber (cont.)

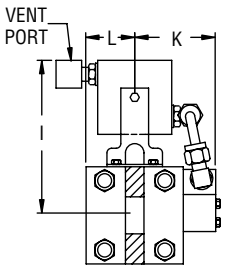

SECTION X-X

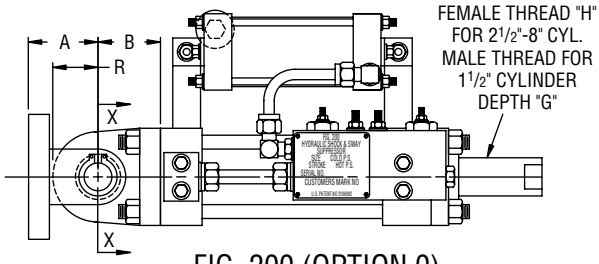

FIG. 200 (OPTION 0)

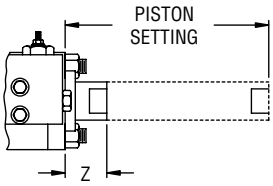

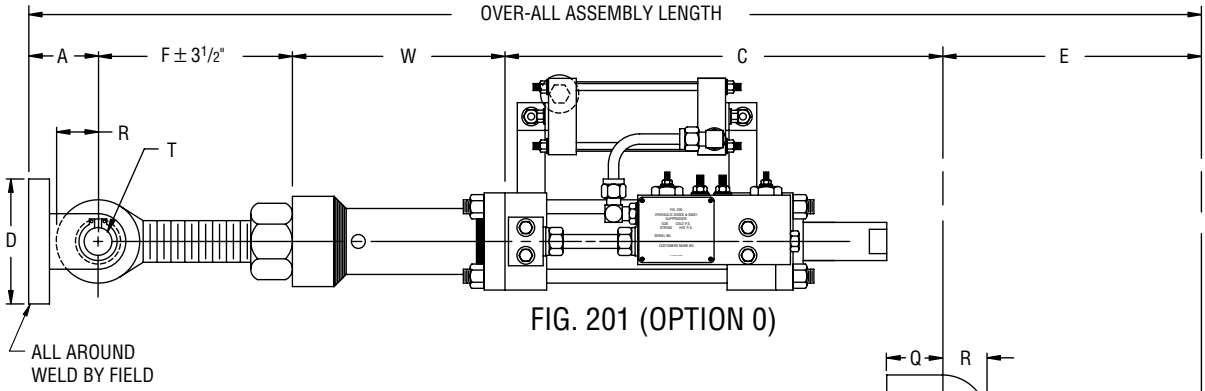

FIG. 201 (OPTION 0)

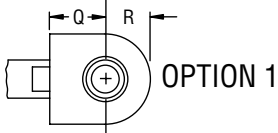

OPTION 1

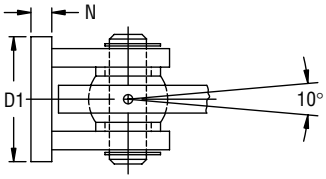

NOTE:
CYLINDER EYE
MAY BE ROTATED
TO ANY POSITION

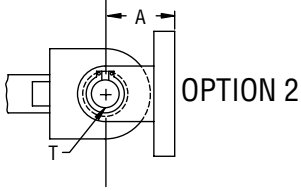

OPTION 2

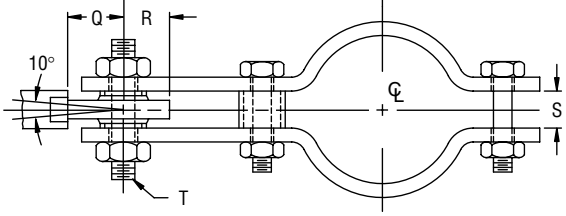

OPTION 3

Fig. 200, Fig. 201

Hydraulic Snubber (cont.)

FIG 200, 201: WEIGHT (LBS) • DIMENSIONS (IN)

Cylinder Bore	Cylinder Stroke	Fig. 200 Wt.	A	B	C Min	C Mid	C Max	D	D1	F	G	H	I Metal Res.	I Trans. Res.	I Press Res.	K	L	N	Q	R	S	T	W Min	W Max	Z
1½	5	45	2½	1⅝	13⅛	15⅝	18⅛	2	2⅜	6	¾	⅝–18	5 9/16	4 13/16	4¾	2¾	2¼	⅝	2⅛	1⅛	1	¾	9½	75⅝	⅝
	10	49			18⅛	23⅛	28⅛																	65⅝	
2½	5	75	2½	2¼	13⅜	15⅞	18⅜	2	2⅞	7 3/16	⅞	⅞–14	6¼	5⅛	5¾	3¼	1¾	¾	2	1⅝	1⅜	1	10⅜	94 9/16	1
	10	81			18⅜	23⅜	28⅜																	84 9/16	
	15	87			23⅜	30⅞	38⅜																	74 9/16	
	20	93			28⅜	38⅜	48⅜																	64 9/16	
3¼	5	121	3	3	14⅞	17⅜	19⅞	3	3 3/16	7 15/16	1⅛	1⅛–12	6⅞	5¾	6¾	3¾	2¼	¾	2½	2 1/16	1 11/16	1¼	10½	92	1⅛
	10	132			19⅞	24⅞	29⅞																	82	
	15	146			24⅞	32⅜	39⅞																	72	
	20	156			29⅞	39⅞	49⅞																	62	
4	5	177	4	3¾	16⅛	18⅝	21⅛	6⅛	4¼	9 5/16	1½	1½–12	7⅛	6	7 13/16	4	2½	1¼	3⅜	2½	2	1½	11½	89 9/16	1⅛
	10	189			21⅛	26⅛	31⅛																	79 9/16	
	15	206			26⅛	33⅝	41⅛																	69 9/16	
	20	223			31⅛	41⅛	51⅛																	59 9/16	
5	5	235	5	4½	18	20½	23	7⅞	5⅜	10 3/16	1⅞	1⅞–12	8½	7	9 5/16	4¾	3¼	1¾	4	3 1/16	2⅜	1¾	12	86 13/16	1⅞
	10	256			23	28	33																	76 13/16	
	15	277			28	35½	43																	66 13/16	
	20	298			33	43	53																	56 13/16	
6	5	292	5¾	5½	19¾	22¼	24¾	9⅛	6¼	11 5/16	2¼	2¼–12	9 1/16	7⅝	10 15/16	5¼	3⅞	2	4⅝	3½	2¾	2	13⅜	83 15/16	1¾
	10	320			24¾	29¾	34¾																	73 15/16	
	15	348			29¾	37¼	44¾																	63 15/16	
	20	375			34¾	44¾	54¾																	53 15/16	
8	5	515	7¼	6	23½	26	28½	14	8¾	14½	4	3–12	12½	N/A	13⅛	8½	4⅞	2¼	6¾	4¾	–	2½	14½	75½	2¼
	10	575			28½	33½	38½																	65½	
	15	640			33½	41	48½																	55½	
	20	705			38½	48½	58½																	45½	

FIG 200, 201: DIMENSIONS (IN)

OD**	E-Take Out at 650˚F — Cylinder Bore 1½	2½	3¼	4	5	6	E Dimension at 1005˚F and 1075˚F* — Cylinder Bore 1½	2½	3¼	4	5	6	8
2	6	6⅜	–	–	–	–	8⅝	8⅝	–	–	–	–	–
2½	7	7	–	–	–	–	8⅞	8⅞	–	–	–	–	–
3	7	7	–	–	–	–	9⅛	9⅛	–	–	–	–	–
3½	7	7	–	–	–	–	9⅜	9⅜	–	–	–	–	–
4	7¼	7¼	–	–	–	–	9⅝	9⅝	–	–	–	–	–
5	7¾	7¾	9⅛	10	–	–	10¼	10¼	10¼	10⅜	–	–	–
6	8⅜	8⅜	10	10	11⅞	–	10¾	10¾	10¾	11⅛	11⅞	–	–
8	9⅜	9⅜	11¼	11¼	12⅝	–	11¾	11¾	11¾	12⅜	13¼	–	–
10	10½	10½	12¾	12¾	14¼	–	12¾	12¾	12¾	13⅞	15	–	–
12	11⅞	11⅞	13⅞	13⅞	15⅜	–	–	13¾	13¾	15	16¼	–	–
14	12⅝	12⅝	14½	14½	16	–	–	14⅜	14¾	15¾	17	–	–
16	13⅝	13⅝	15¼	15¼	17⅛	–	–	15⅜	15⅞	16⅞	18⅛	–	–
18	14⅝	14⅝	16⅜	16⅜	18¼	–	–	16⅜	16⅞	18	19¼	–	–
20	15¾	15¾	17¾	17¾	19¼	19¼	–	17⅜	18	19	21	20¾	22½
24	18⅛	18⅛	19⅞	19⅞	21¾	21¾	–	19⅜	20	21⅞	23¼	23	24¾
30	21¼	21¼	23	23	25	25	–	22⅜	23½	25	26½	26¼	28¼
36	24	24	26½	26½	28⅛	28⅛	–	25⅜	26⅝	28⅛	29⅝	–	–

* Please specify whether a 1005˚F clamp or 1075˚F clamp is required when ordering.
**When calculating snubber pin to pin for intermediate sizes, use the takeout "E" for the next largest pipe diameter.
Note: Carbon steel clamps can accomodate up to 4" insulation. Alloy can accomodate 6".
High temperature clamps will be made from alloy steel. Stainless steel available upon request. For other special design requirements, please contact your Anvil EPS sales representative.