Choose the MTM 300
Choose *Engineered Efficiency:*

- Unique Saddle Design – Out-Lets Cover Broader Range of Pipe Sizes Reducing Inventory and Lowering Costs.
- Engineered for Fast One-Pass Welding – More Efficient to Install; Saving Time, Labor and Money
- Thick Wall – Easy to Install While Reducing Heat Distortion & Burn Through
- Threads Are Quality Controlled to Aeronautical Standards – Superior Reliability Over Standard NPT Thread Forms. Fewer Leaks Translate into Lower Costs.
- Modern Design – Developed to Maximize Production Efficiencies of NAP Universal Welders, NAP Line Welders and other Current Weld Equipment.

LISTED APPROVED

For Listings/Approval Details and Limitations, visit our website at www.anvilintl.com or contact an Anvil® Sales Representative.

GENERAL SPECIFICATIONS

MTM 300 Tee-Lets are manufactured from highly weldable steel which conforms to the chemical and physical requirements of ASTM A-53, Grades A or B, Type E

That is why MTM 300 Tee-Let thread-forms are quality controlled to Aeronautical National Form standards, which requires gaging both L-1 hand tight and L-3 wrench tight threads. This results in superior thread engagement and a more forgiving Tee-Let than those inspected only to traditional NPT L-1 gaging standards.

RECOMMENDED HOLE SIZES

Holes may be cut by mechanical means including hole sawing, mechanical flame cutting (oxy-acetylene or propane), and air plasma cutting machines. When installing MTM 300 Products, Anvil International recommends using NAP fabrication equipment for consistent operations.

RECOMMENDED WELD PROCEDURES

As a general rule, the weld should be only as hot as required to allow the weld to penetrate the materials being welded while allowing gases developed in the welding process to escape. **Excessive heat may cause the threads near the weld zone to distort while also causing the branch line pipe to bend.**

APPROVED PIPE MANUFACTURERS

MTM 300 Tee-Lets are designed to be installed on Schedule 40, Schedule 10 and Proprietary Flow Pipe. Please visit www.anvilintl.com for a complete listing or contact your local Anvil International Representative.

AGENCY APPROVALS

MTM 300 Tee-Lets are UL/ULC Listed and FM Approved for use in Automatic Fire Sprinkler Systems installed in accordance with the requirements of NFPA Bulletin 13. The Tee-Lets are rated for 300psi for fire sprinkler systems.

CAUTION:
MTM 300 Tee-lets described herein must be installed and maintained in compliance with this document as well as the applicable standards of the National Fire Protection Association in addition to the standards of any other authorities having jurisdiction.

PROJECT INFORMATION	APPROVAL STAMP
Project:	☐ **Approved**
Address:	☐ **Approved as noted**
Contractor:	☐ **Not approved**
Engineer:	**Remarks:**
Submittal Date:	
Notes 1:	
Notes 2:	

SPF MTM 300 Welded Out-Let Fittings

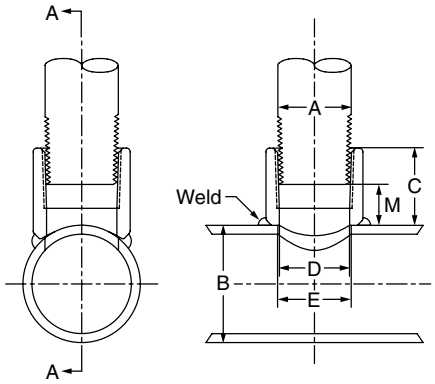

MTM 300 Tee-Let

Part Number	Nominal Outlet or Branch Size A	Nominal Header or Run Size B	Outlet Length C	Inside Diameter D	Recommended Hole Size** E	Make Up M	Weight Per Unit
NPT (ISO)	In (mm)	In (mm)	In (mm)	In (mm)	In (mm)	In (mm)	Lb. (kg)
0870005006 –	½ x 15 x	1¼ - 2½ 40 - 65	1.063 27.000	0.763 19.38	0.813 20.638	0.531 13.487	0.18 0.08
0870005022 –		3 - 8 80 - 200					0.18 0.08
0870005105 –	¾ x 20 x	1¼ - 2 40 - 50	1.125 28.575	0.910 23.114	0.938 23.813	0.578 14.681	0.28 0.13
0870005121 –		2½ - 8 65 - 200					0.27 0.12
0870005204 –	1 x 25 x	1¼ 32	1.250 31.750	1.140 28.956	1.188 30.163	0.594 15.088	0.34 0.15
0870005220 –		1½ - 2 40 - 50					0.34 0.15
0870005246 –		2½ - 4 65 - 100					0.33 0.15
0870005261 –		5 - 8 125 - 200					0.32 0.15
0870005303 –	1¼ x 32 x	1½ 40	1.375 34.925	1.480 37.592	1.500 38.100	0.688 17.475	0.46 .21
0870005329 –		2 - 2½ 50 - 65					0.46 .21
0870005345 –		3 - 4 80 - 100					0.44 .20
0870005360 –		5 - 8 125 - 200					0.43 .20
0870005402 1115020	1½ x 40 x	1½ 40	1.625 41.275	1.610 40.894	1.625 41.275	0.938 23.825	0.48 .022
0870005428 1115020		2 50					0.48 .022
0870005444 1115025		2½ 65					0.48 .022
0870005469 1115030		3 - 4 80 - 100					0.48 .022
0870005485 1115040		4 100					0.48 .022
0870005501 1115050		5 - 8 125 - 200					0.48 .022
0870005600 1120020	2 x 50 x	2 50	1.750 44.450	2.067 52.502	2.125 53.975	1.047 26.594	0.86 0.39
0870005626 1120025		2½ 65					0.83 0.38
0870005642 1120030		3 80					0.83 0.38
0870005667 1120040		4 100					0.80 0.36
0870005683 1120060		6 150					0.74 0.34
0870005709 1120080		8 200					0.74 0.34

For Listings/Approval Details and Limitations, visit our website at www.anvilintl.com or contact an Anvil Sales Representative.

**Hole sizes are recommendations only. Fabricator/installer must account for different cutting methods to comply with applicable codes and regulations.