Fig. 188

Two Hole Stand Off Strap

Size Range: 3/4" through 2"
Finish: Zinc Plated Steel (Hot-Dip Galvanized optional)
Service: Hanger for CPVC pipe in the horizontal position on the bottom of structural wood beams and steel 20ga. min. (Fig. B). It can also be used as a guide to limit movement for a pipe in the horizontal/vertical position on the side of structural wood beams, composite wood beams and steel 20ga. min. (Fig. A).
Approvals: UL and ULC Listed.
Installation:

- Snap hanger over pipe.
- Position hanger back around pipe but allow for pipe movement.
- Secure hanger to mounting surface with screws provided. Recheck to insure that the pipe is allowed to move freely through hanger.
- Steel applications require two (2) #14 x 1" hex washer head self-drilling TEK screws. Not Supplied. Part Number STD-0090.

Features:

- Beveled edge design helps protect the CPVC pipe from any rough surface.
- Easily attaches to wood structure with #10 x 1" hex washer head self threading screw supplied with product. No pre-drilling required.
- Eliminates wooden spacer blocks.

Ordering: Specify CPVC pipe size, figure number and description.

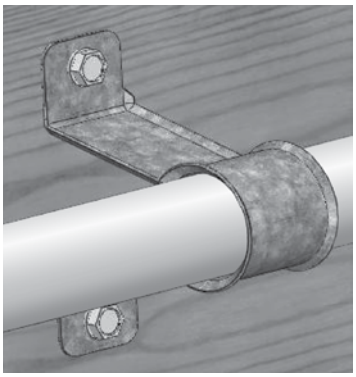

Fig. A

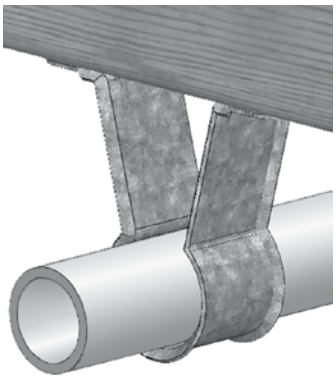

Fig. B

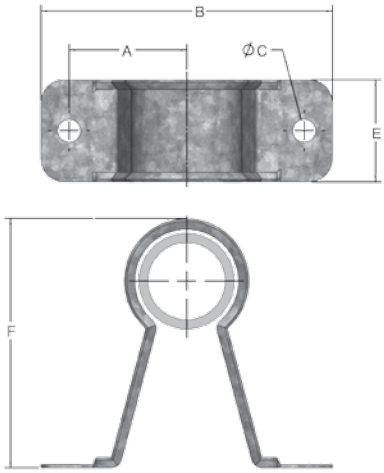

FIG. 188: WEIGHT (LBS) • DIMENSIONS (IN)							
CPVC Pipe Size	A	B	øC	E	F	Max. Hanger Spacing (FT.)	Approx. Weight/100 (lbs)
3/4	1 5/16	3 1/4	1/4	1 1/8	2 3/4	5 1/2	5
1	1 3/8	3 3/8	1/4	1 1/8	3	6	6
1 1/4	1 1/2	3 11/16	1/4	1 1/8	3 5/16	6 1/2	7
1 1/2	1 7/8	4 3/8	1/4	1 1/8	3 9/16	7	8
2	2	4 1/2	1/4	1 1/8	4 1/8	8	9

PROJECT INFORMATION	APPROVAL STAMP
Project:	☐ Approved
Address:	☐ Approved as noted
Contractor:	☐ Not approved
Engineer:	Remarks:
Submittal Date:	
Notes 1:	
Notes 2:	